

Reinforced Concrete Design I

3rd Stage Civil Engineering (25-26)

Asst. Prof. Dr. Ali Hassan Ali

Syllabus

Chapter	Topic
1	Introduction: Properties of concrete, reinforcing steel, and loads
2	Flexural behavior of beams by working stress method
-	Analysis and design of singly reinforced sections by working stress method
3	Ultimate Strength Method
-	Analysis and design of singly reinforced sections by ultimate strength method
-	Analysis and design of doubly reinforced sections
-	Analysis and design of T-Reinforced sections
-	Analysis and design of irregular reinforced sections
-	Analysis and design of continuous beams
4	Shear analysis and design of beams
5	Development, anchorage and splicing of reinforcement
6	Analysis and design of beams for torsion
7	Analysis and design of one-way slabs
8	Analysis and design of two-way slabs
9	Serviceability (deflection and crack width)
10	Analysis and design of RC columns

References

- Nilson A.H., Darwin D., and Dolan C.W., *Design of Concrete Structures*, 13th Edition, McGraw Hill, 2004.
- Darwin D., Dolan C.W., and Nilson A.H., *Design of Concrete Structures*, 15th Edition, McGraw Hill, 2016.
- ACI 318, *Building Code Requirements for Structural Concrete*, USA, 2019.
- Wight J.K. and MacGregor J.G., *Reinforced Concrete: Mechanics and Design*, 6th Edition, Pearson Education, Inc., 2012.
- Nawy E.G., *Reinforced Concrete: A Fundamental Approach*, 6th Edition, Pearson, 2008.
- Wang C.-K., Salmon C.G. and Pincheira J., Parra-Montesinos G.J. *Reinforced Concrete Design*, 8th Edition, Oxford University Press, 2017.
- McCormac J.C. and Brown R.H., *Design of Reinforced Concrete*, 10th Edition, Wiley, 2015.
- Hassoun M.N., Al-Manaseer A., *Structural Concrete: Theory and Design*, 6th Edition, Wiley, 2015.
- Mahmoud K.S. *Lectures for Design of Reinforced Concrete Structures,* 2021.
- Arman, I.M. *Design of Reinforced Concrete Structures A Practical Approach*, 3rd Edition, 2021.



Learning Objectives

- Understanding the behaviour of concrete materials.
- To be familiar with the reinforced concrete design methods.
- Understanding the behaviour of reinforced concrete sections under different types of failure.
- To be familiar with designing and analysing of different shapes of reinforced concrete beams under variety of loading conditions.
- To be familiar with designing and analysing of different types of reinforced concrete slabs under variety of loading conditions.
- To be familiar with reinforcement arrangements in the reinforced sections.

Chapter Two
Working Stress Method

This chapter presents an introduction about the design methods and includes illustrative examples along with the flexural behaviour of RC beams and types of flexural failure. When two different materials such as steel and concrete act together, it is understandable that the analysis for strength of a reinforced concrete member has to be partly empirical. These principles and methods are being constantly revised and improved as results of theoretical and experimental investigations. The American Concrete Institute (ACI), serving as a clearinghouse for these changes, issues building code requirements, the most recent of which is the Building Code Requirements for Structural Concrete (ACI 318M-19), hereafter referred to as the ACI Code. ACI Code is a Standard of the American Concrete Institute. In order to achieve a legal status, it must be adopted by a governing body as a part of its general building code. ACI Code is partly a specification-type code, which gives acceptable design and construction methods in detail, and partly a performance code, which states desired results rather than details of how such results are to be obtained.

Chapter Two
Working Stress Method

A building code, legally adopted, is intended to prevent people from being harmed. Therefore, it specifies minimum requirements to provide adequate safety and serviceability. It is important to realize that a building code is not a recommended practice, nor is it a design handbook, nor is it intended to replace engineering knowledge, judgment, or experience. It does not relieve the designer of the responsibility for having a safe, economical structure.

ACI-318-19 – Building Code Requirements for Structural Concrete and Commentary, two philosophies of the design have long been prevalent:

- **The working stress method (1900 – 1960)**.
- **The strength design method (1960 till now, with few exceptions)**.

Chapter Two
Working Stress Method

2.1 Working Strength Method:

In the working stress method, a structural element is so designed that the stresses resulting from the action of service loads (also called working loads) and computed by the mechanics of elastic members do not exceed some predesigned allowable values. Service load is the load, such as dead, live, snow, wind, and earthquake, which is assumed actually to occur when the structure is in service. The working stress method may be expressed by the following:

$$f_{applied} \leq f_{allowable}$$

Where $f_{applied}$: is an elastic stress, such as by using the flexure formula $f = Mc/I$ for a beam, computed under service load.

$f_{allowable}$: is a limiting or allowable stress prescribed by a building code as a percentage of the compressive strength f_c' for concrete, or f_y of the yield stress for the steel reinforcing bars.

Chapter Two
Working Stress Method

2.2 Strength Design Method:

In the strength design method (formerly called ultimate strength method), the service loads are increased by factors to obtain the load at which failure is considered to be "imminent". This load is called the factored load or factored service load. The structure or structural element is then proportioned such that the strength is reached when the factored load is acting. The computation of this strength takes into account the nonlinear stress-strain behavior of concrete. The strength design method may be expressed by the following:

Strength provided ≥ [strength required to carry factored loads]

Where:

The "strength provided" (such as moment strength) is computed in accordance with the provisions of a building code, and the "strength required" is that obtained by performing a structural analysis using factored loads.

Chapter Two
Working Stress Method

The following table illustrates the basic differences between the Working Stress Design (WSD) method and the Ultimate Stress Design (USD) method of reinforced concrete design.

Ultimate Stress Design Method (USD)	Working Stress Design Method (WSD)
)It is defined as the method of designing structural members by considering the ultimate strength of steel and for concrete is called USD Method.	It is defined as the method of designing structural members by considering the allowable strength of steel and for concrete is called WSD Method.
It is primarily based on the strength concept of concrete (inelastic action).	It is based on the linear theory or elastic theory (elastic action).
Factor of Safety for the applied load is considered in the design. It is considered to design the critical combination of load.	Factor of Safety for the applied load is not considered in the design. It is considered to design the carrying load.
Materials strength is to be used for member design.	Modular Ratio is used for member design.
This method is used for mostly the biggest structures and developed nations (modern and economical design method).	This type of method is used for mostly small structures and undeveloped nations (old and less economical design method)

Chapter Two
Working Stress Method

The used factors U for the applied loads as given by ACI-9.2 are as follows:

1- $U = 1.4(D + F)$

2- $U = 1.2(D + F + T) + 1.6(L + H) + 0.5(Lr\ or\ S\ or\ R)$

3- $U = 1.2D + 1.6(Lr\ or\ S\ or\ R) + (1.0L\ or\ 0.8W)$

4- $U = 1.2D + 1.6W + 1.0L + 0.5(Lr\ or\ S\ or\ R)$

5- $U = 1.2D + 1.0E + 1.0L + 0.2S$

6- $U = 0.9D + 1.6W + 1.6H$

7- $U = 0.9D + 1.0E + 1.6H$

Where D = dead load; L = live load; Lr= roof live load; S = snow load; R = rain load; W = wind load; E = earthquake load; F = load due to weights and pressures of fluids with well-defined densities and controllable maximum heights; H =load due to weight and pressure of soil, water in soil or other materials; T = the cumulative effect of temperature, creep, shrinkage, differential settlement, and shrinkage compensating concrete.

Chapter Two
Working Stress Method

Useful ready formulas for calculating shear forces and bending moments are as follows:

SIMPLE BEAM—UNIFORMLY DISTRIBUTED LOAD

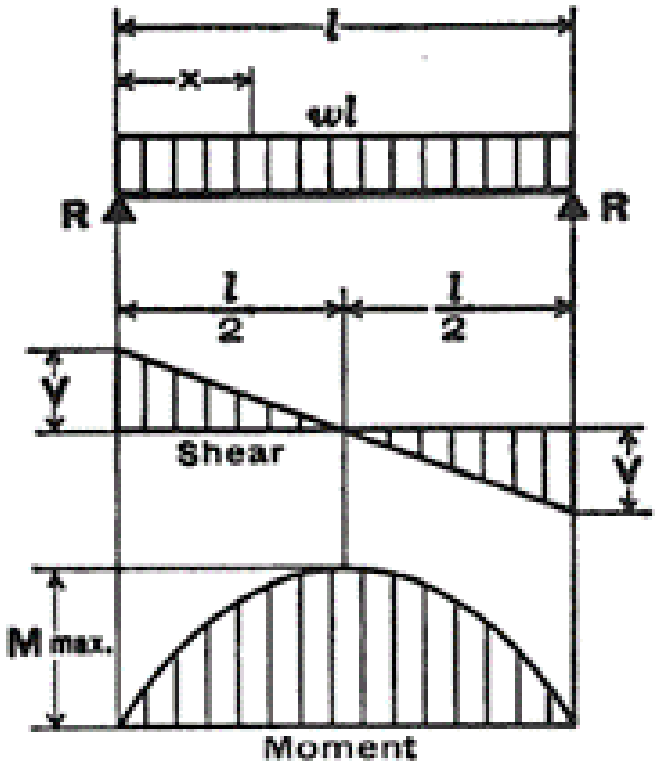

Total Equiv. Uniform Load . . .	$= wl$
$R = V$	$= \frac{wl}{2}$
V_x	$= w\left(\frac{l}{2} - x\right)$
M max. (at center)	$= \frac{wl^2}{8}$
M_x	$= \frac{wx}{2}(l - x)$
Δmax. (at center)	$= \frac{5\,wl^4}{384\,EI}$
Δ_x	$= \frac{wx}{24EI}(l^3 - 2lx^2 + x^3)$

Chapter Two
Working Stress Method

Useful ready formulas for calculating shear forces and bending moments are as follows:

CANTILEVER BEAM—UNIFORMLY DISTRIBUTED LOAD

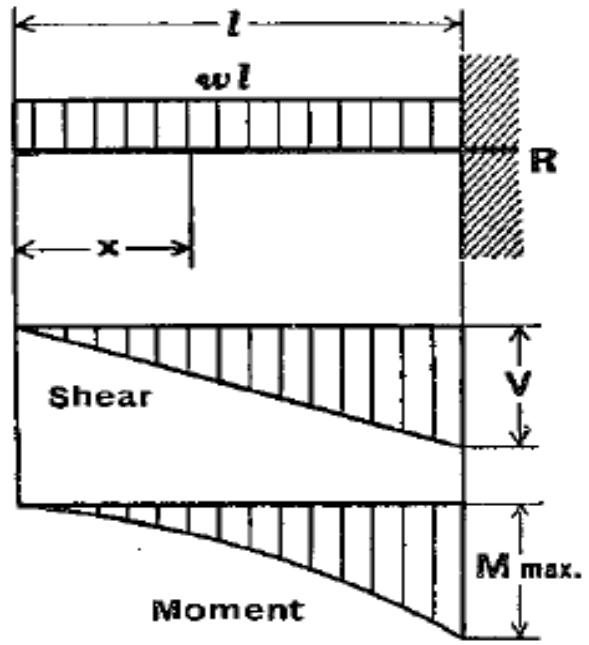

Total Equiv. Uniform Load	$= 4wl$
$R = V$	$= wl$
V_x	$= wx$
M max. (at fixed end)	$= \frac{wl^2}{2}$
M_x	$= \frac{wx^2}{2}$
Δmax. (at free end)	$= \frac{wl^4}{8EI}$
Δ_x	$= \frac{w}{24EI}(x^4 - 4l^3x + 3l^4)$

Chapter Two
Working Stress Method

Useful ready formulas for calculating shear forces and bending moments are as follows:

CANTILEVER BEAM—CONCENTRATED LOAD AT FREE END

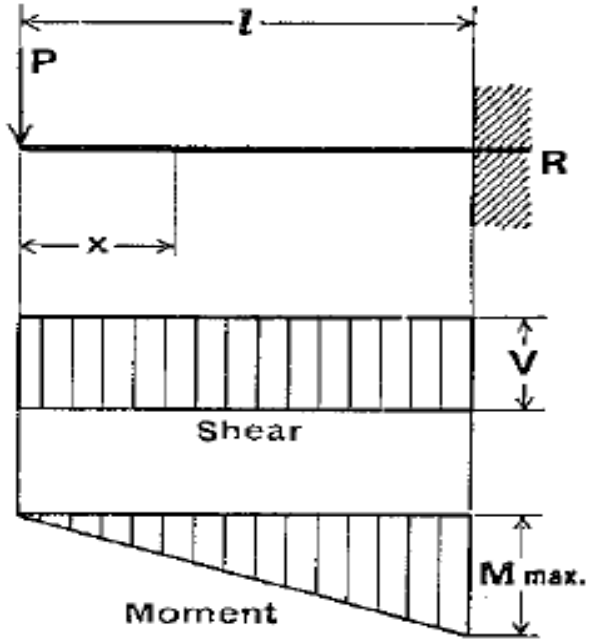

Total Equiv. Uniform Load . . . . . $= 8P$

$R = V$ . . . . . $= P$

M max. (**at fixed end**) . . . . . $= Pl$

M_x . . . . . $= Px$

Δmax. (**at free end**) . . . . . $= \frac{Pl^3}{3EI}$

Δx . . . . . $= \frac{P}{6EI}(2l^3 - 3l^2x + x^3)$

Chapter Two
Working Stress Method

Useful ready formulas for calculating shear forces and bending moments are as follows:

CANTILEVER BEAM—LOAD INCREASING UNIFORMLY TO FIXED END

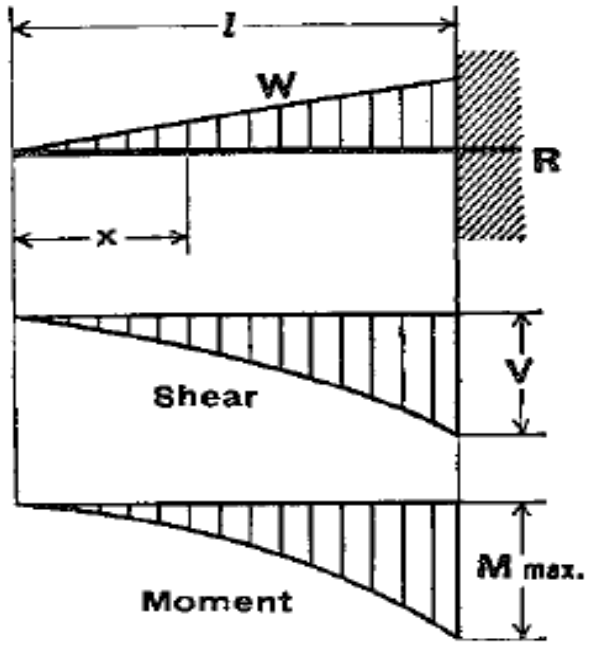

Total Equiv. Uniform Load	$= \frac{8}{3} W$
$R = V$	$= W$
V_x	$= W \frac{x^2}{l^2}$
M max. (at fixed end)	$= \frac{Wl}{3}$
M_x	$= \frac{Wx^3}{3l^2}$
Δmax. (at free end)	$= \frac{Wl^3}{15EI}$
Δ_x	$= \frac{W}{60EIl^2}(x^5 - 5l^4x + 4l^5)$

Chapter Two
Working Stress Method

Illustrative Example 2.1: A simple beam is loaded with a superimposed dead load equal to 10 (kN/m) and a live load of 20 kN/m. Find the max. moment and shear capacity for the beam shown below by using Ultimate Stress Design Method and Working Stress Design Method if the beam dimension is (280 x 500) mm.

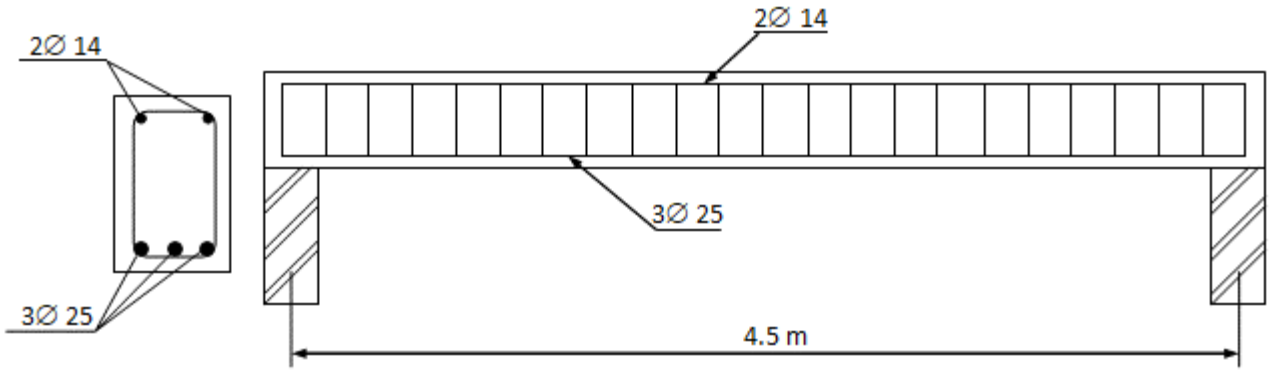

Solution:

W_d = Self-weight of the beam

= γ A = 24 x (280/1000 * 500/1000)

= 3.36 kN/m

Total $W_{d.l}$ = 3.36 + 10 = 13.36 kN/m

1- By Ultimate Stress Design Method

$W_u = 1.2*W_{d.l} + 1.6\ W_{l.l} = 1.2 * 13.36 + 1.6* 20 = 48$ kN/m

$V_{umax.} = W_u * L/2 = 48*4.5/2 = 108$ kN

$M_{umax.} = W_u * L^2/8 = 48*4.5^2/8 = 121.5$ kN.m

Chapter Two
Working Stress Method

Illustrative Example 2.1: A simple beam is loaded with a superimposed dead load equal to 10 (kN/m) and a live load of 20 kN/m. Find the max. moment and shear capacity for the beam shown below by using Ultimate Stress Design Method and Working Stress Design Method if the beam dimension is (280 x 500) mm.

Solution:

2- By Working Stress Design Method

$W_a = W_{d.l} + W_{l.l}$

$= 13.36 + 20 = 33.36$ kN/m

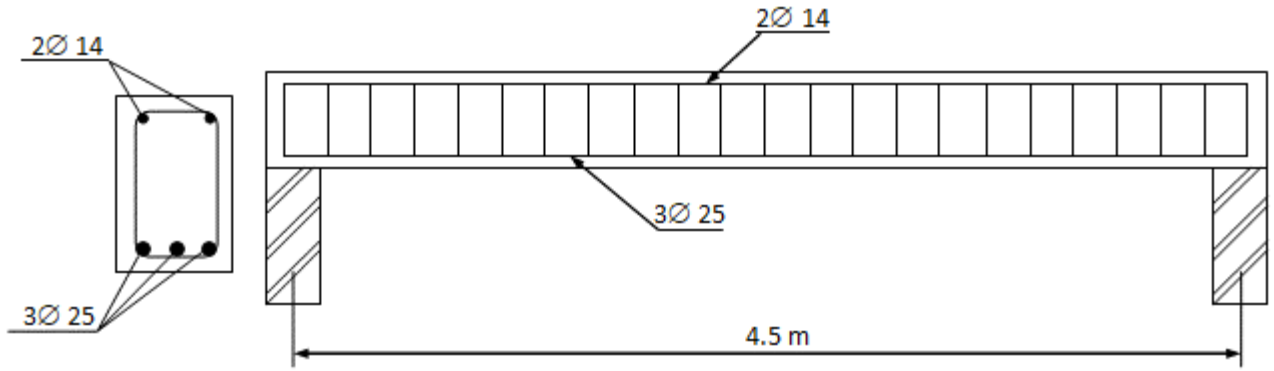

$V_{amax.} = W_u L/2 = 33.36 * 4.5/2 = 75.06$ kN

$M_{amax.} = W_u L^2/8 = 33.6 * 4.5^2/8 = 84.455$ kN.m

Chapter Two
Working Stress Method

2.3 Behavior of Simply Supported Reinforced Concrete Beam Loaded to Failure:

Concrete being weakest in tension, a concrete beam under an assumed working load will definitely crack at the tension side, and the beam will collapse if the tensile reinforcement is not provided. Concrete cracks occur at a loading stage when its maximum tensile stress reaches the modulus of rupture of concrete. Therefore, steel bars are used to increase the moment capacity of the beam. By considering any reinforced concrete beam carries an incrementally accumulative increased load as shown below. The beam will pass through six stress stages which are:

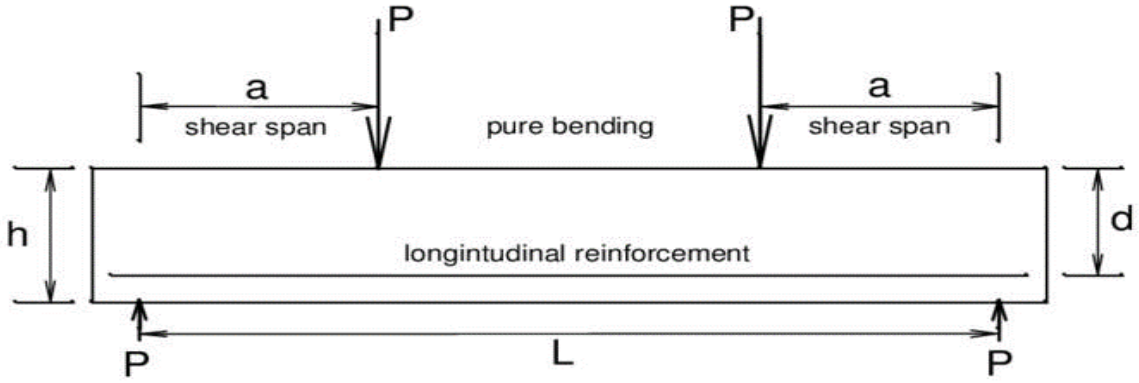

Chapter Two
Working Stress Method

Stage 1: Elastic Uncracked Stage (The applied load on beam is less than the load which causes cracking).

Stage 2: Elastic Cracked-threshold Stage (The applied load makes the bottom fiber stress equal to modulus of rupture of concrete, f_{cr}).

Stage 3: Elastic Cracked Stage (The external applied loads cause the bottom fibers equal to modulus of rupture of the concrete. Entire concrete section was effective, steel bar at tension side has the same strain as surrounding concrete).

Stage 4: Inelastic Cracking Stage (The tensile strength of the concrete exceeds the, f_{cr} and cracks develop. The neutral axis shifts upward and cracks extend to neutral axis. Concrete loses tensile strength and steel starts working effectively and resists the entire tensile load).

Stage 5: Ultimate Strength Stage (The steel reinforcement yields).

Stage 6: Failure Stage (The material stresses will be exceeding its corresponding capacity).

Chapter Two
Working Stress Method

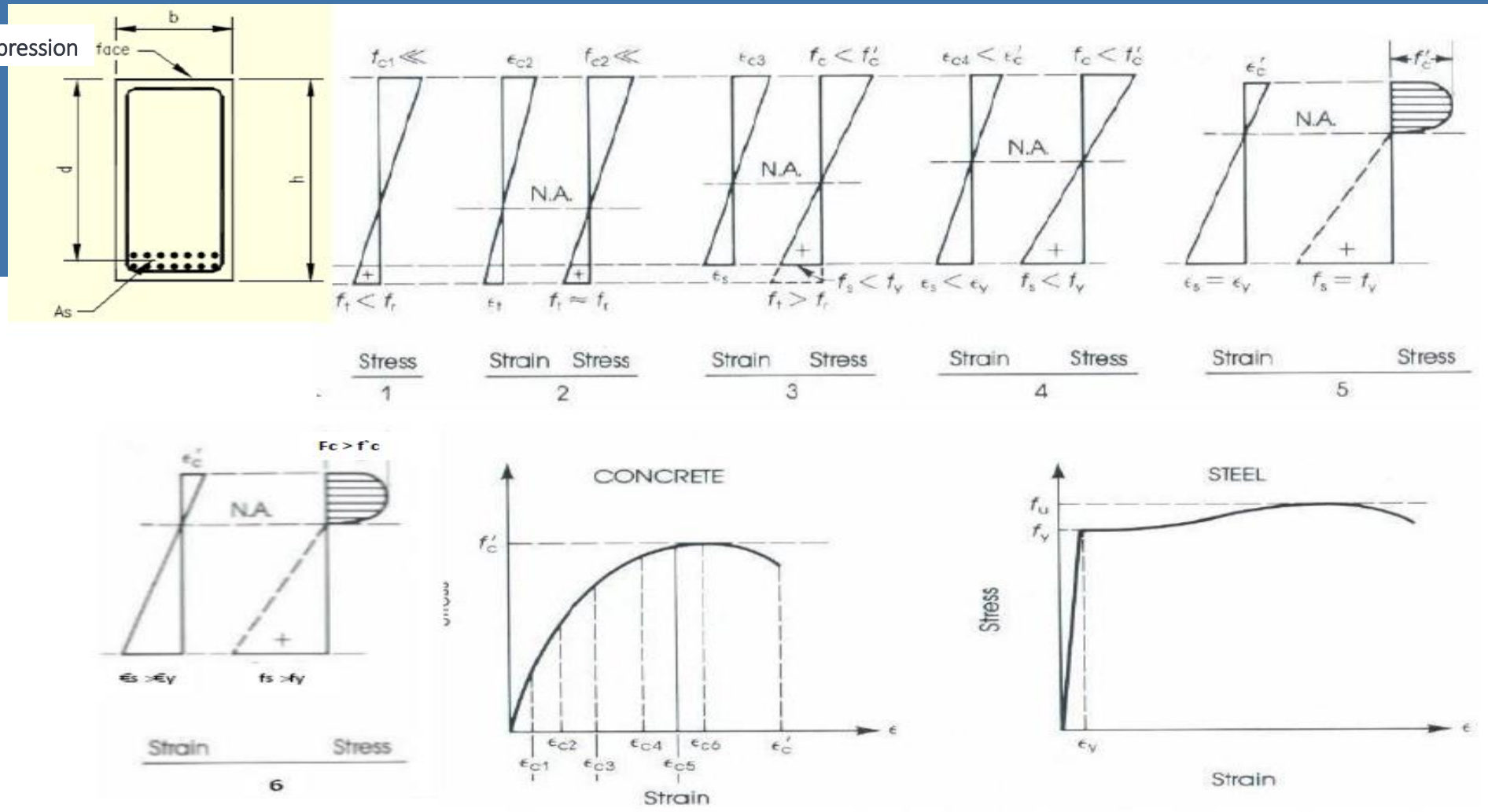

Stress stages of RC beam

Chapter Two
Working Stress Method

2.4 Types of Flexural Failure:

Three types of flexural failure of a structural member can be expected depending on the percentage of steel used in the section.

1 .Steel may reach its yield strength before the concrete reaches its maximum strength. In this case, the failure is due to the yielding of steel reaching a high strain equal to or greater than **0.005**. The section contains a relatively small amount of steel and is called a tension-controlled section (**Under Reinforced Beams**).

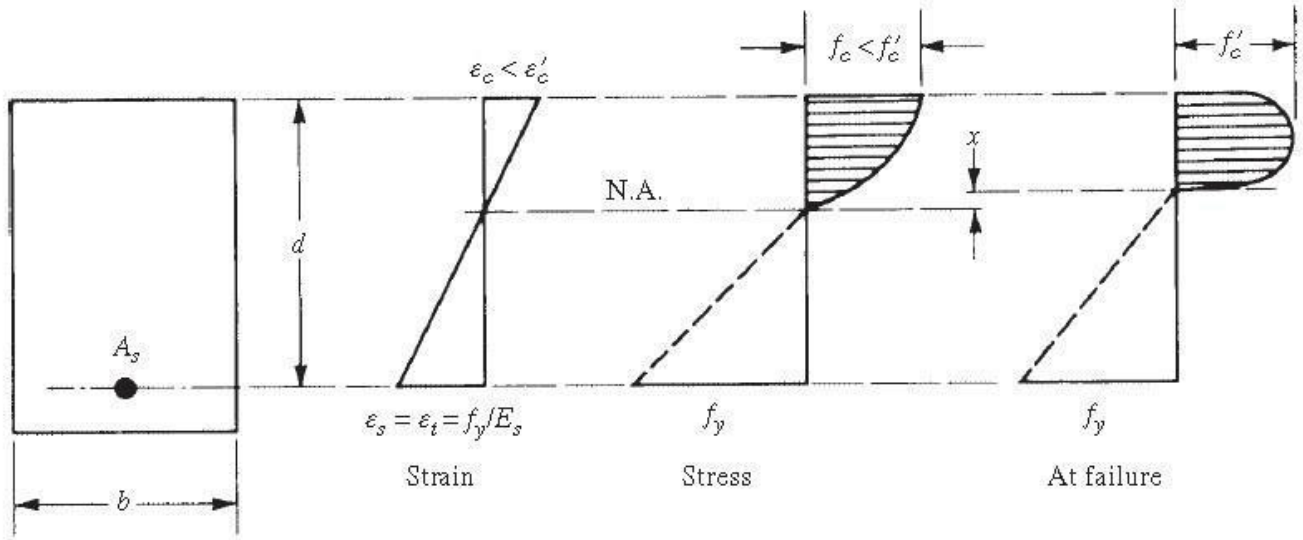

Chapter Two
Working Stress Method

2. Steel may reach its yield strength at the same time as concrete reaches its ultimate strength. The section is called a balanced section (**Balanced Reinforced Beams**).

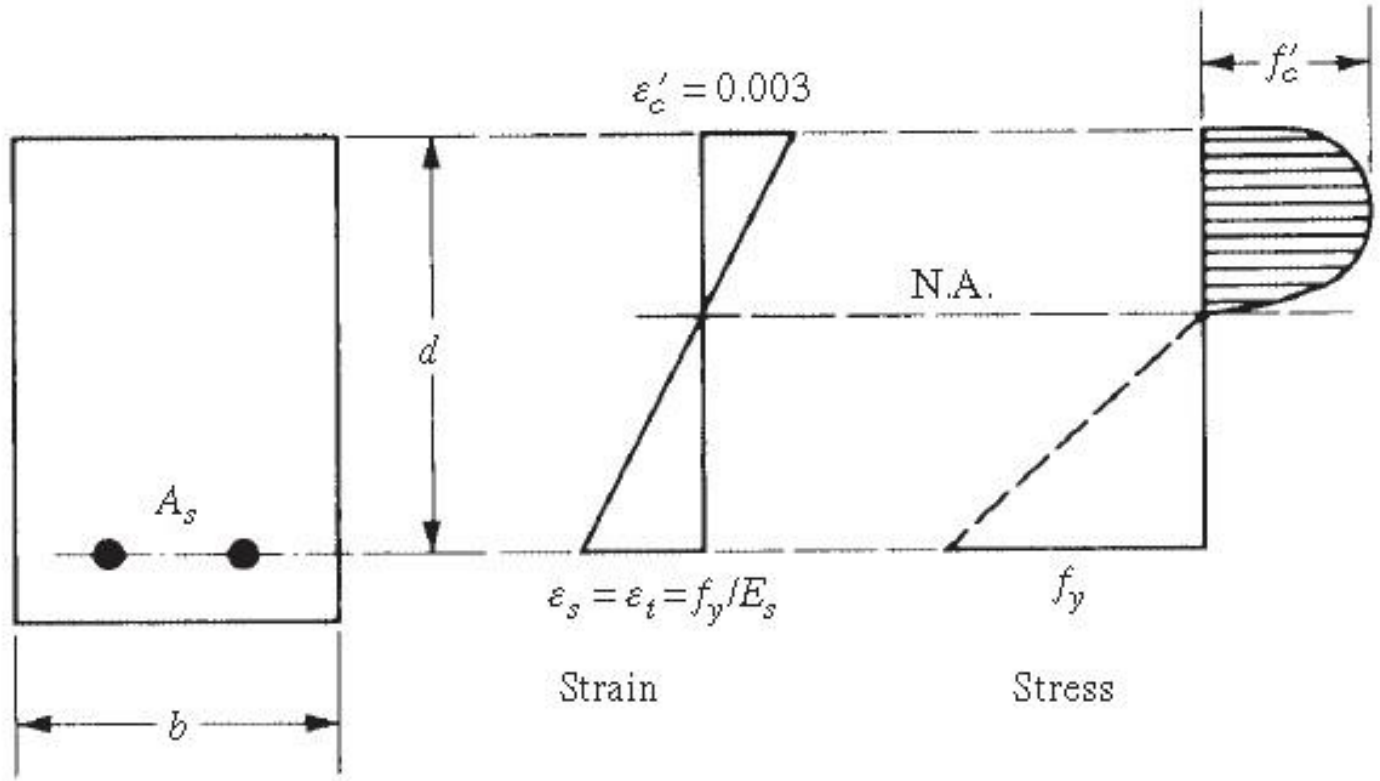

Chapter Two
Working Stress Method

3. Concrete may fail before the yielding of steel due to the presence of a high percentage of steel in the section. In this case, the concrete strength and its maximum strain of **0.003** are reached, but the steel stress is less than the yield strength that is f_s is less than f_y. The strain in the steel is equal to or less than **0.002**. This section is called a compression-controlled section (**Over Reinforced Beams**).

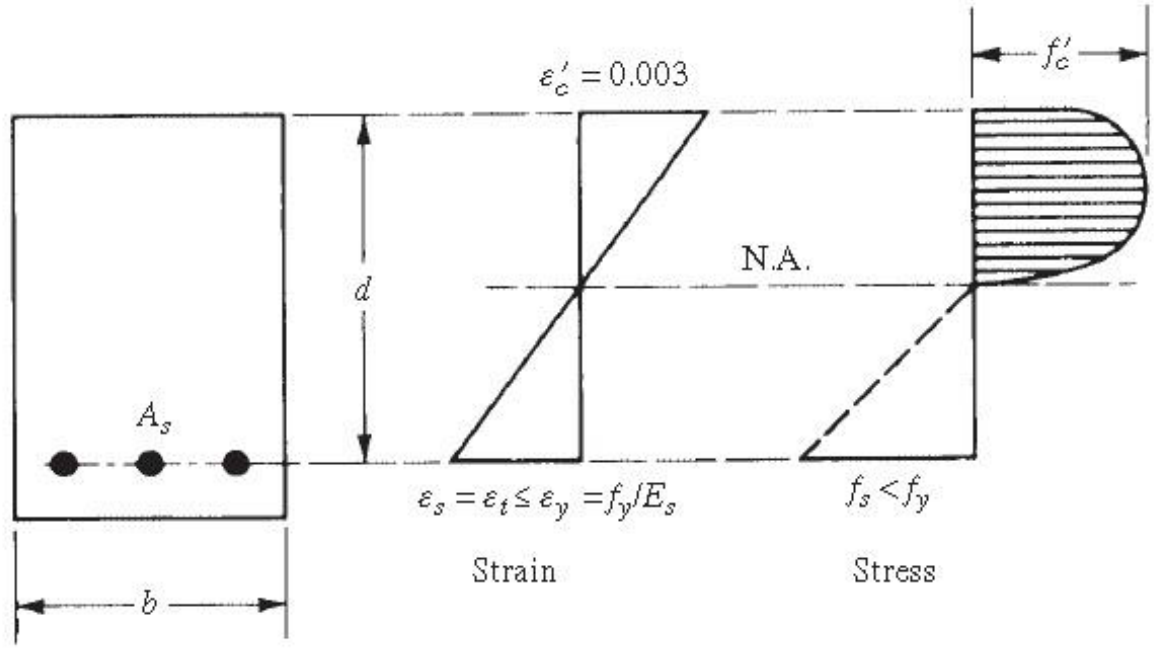

Chapter Two
Working Stress Method

2.5 Analysis and Design of Beams for Flexure using Working Stress Design (WSD) Method:

The importance of this method is as follows:

1. Determine the stresses in concrete and steel due to **service loads**, this is very important in the design of water tanks to control cracks of sections designed by the ultimate design method.

2. Determine the cracked moment of inertia of a member, this is very important in calculating the deflections in beams.

By this method, structural elements are designed assuming **linear stress-strain behavior**, such that, at service loads the stresses in steel and concrete do not exceed a specified working stress. This working stress is taken as a certain proportion of the ultimate strength of concrete or yield strength of steel.

Chapter Two
Working Stress Method

Load factors for all types of loads are taken to be **unity** for this design method.
Permissible stresses are defined as **characteristic strength divided by factor of safety**.
The factor of safety is not unique values either for concrete or for steel. Therefore, the permissible or allowable stresses in concrete and steel at service load must not exceed the following:

- Flexure extreme fiber stress in compression: $f_{c,all} = 0.45\, f_c'$
- Tensile stress in reinforcement: $f_{s,all} = 0.4\, f_y$

$f_s = 140$ If $f_y < 420$ MPa
$f_s = 170$ If $f_y \geq 420$ MPa

- Modulus of elasticity for steel reinforcement ($E_s = 200000$ MPa)
- Modulus of elasticity for concrete ($E_c = 4700\sqrt{f_c'}$ MPa)
- Modular Ratio, $n = E_s / E_c$.

Chapter Two
Working Stress Method

- Transformed Section: Substituting steel area with (nAs) of fictitious concrete.
- Location of neutral axis depends on whether we are analyzing or designing a section.

In this method, the concrete sections are classified into:

1- Uncracked sections

2- Cracked sections

For uncracked sections, the stresses in concrete and steel are calculated using the following formulas:

$$\sigma = \frac{My}{I}$$

where

M: is the applied service moment (N.mm).

y: is the distance from the centroid of section to the point at which the stresses are to be calculated (mm).

I: is the gross moment of inertia (mm^4).

Chapter Two
Working Stress Method

Thus:

$$f_c = \frac{My_c}{I_g} \qquad f_t = \frac{My_t}{I_g} \qquad f_s = \frac{My_s}{I_g} n$$

where

Y_c: is the distance from the extreme fibers at the compression edge to the centroid of the section (mm).

Y_t: is the distance from the extreme fibers at the tension edge to the centroid of the section (mm).

Y_s: is the distance from centroid of tension reinforcement to the centroid of the section (mm).

I_g: is the gross moment of inertia (mm^4). If the moment of inertia, I_g is computed neglecting reinforcing steel, $y_c = h/2 = y_t$ in a rectangular section.

Chapter Two
Working Stress Method

Here, the strain and stress diagrams are linear in the uncracked section as shown below:

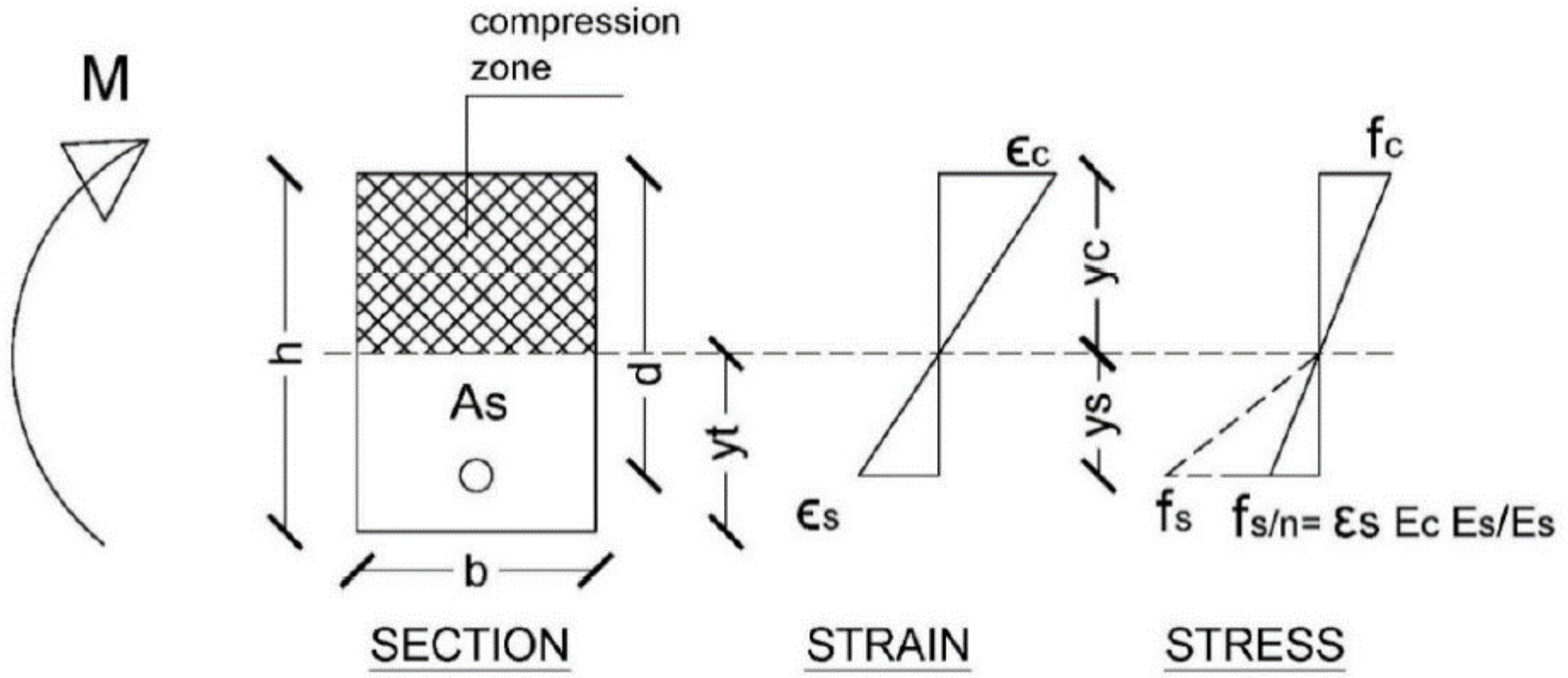

Uncracked section

Chapter Two
Working Stress Method

Assuming perfect bond between steel and concrete, so we have:

$$\varepsilon_c = \varepsilon_s$$

where $\varepsilon_s = f_s/E_s$, $\varepsilon_c = f_c'/E_c$

$f_s = E_s * f_c'/E_c \longrightarrow f_s = n * f_c'$

Equivalent force in steel $T = A_s * f_s = A_s * n * f_c'$

Equivalent force in concrete $C = A * t * f_c'$

The neutral axis or line of zero strain is located by considering the equilibrium of forces acting on cross section, $C = T$,

$A_s * f_s = A * t * f_c' \longrightarrow A_s * n * f_c' = A * t * f_c'$

$At = n A_s$

$A_e = A_c + A_t$

$A_e = A_g - A_s + nA_s$

$A_e = A_g + (n-1)A_s$

Chapter Two
Working Stress Method

Where:

A_e= is the transformed section

A_g = is the rectangular area ($b*h$)

A_c= is the area of concrete.

Homogenous section and under bending:

$$y' = \sum Ay / \sum A = (bh)(h/2) + (n-1)A_s d/bh + (n-1)A_s$$

$$I_{N\text{-}A} = \sum(bh^3/12 + Ad^2) + \cancel{(\pi D^4/64)} + (n-1)A_s(d-y`)^2$$

$$I_{N\text{-}A} = by`^3/3 + b(h-y`)^3/3 + (n-1)A_s(d-y`)^2$$

To find the stress in concrete and steel

$$\delta = Mc/I$$

$f_c' = My`/I_{N\text{-}A} < 0.45f_c'$ (Compression in Concrete)

$f_s = M(d-y`)/I_{N\text{-}A} * n < f_s$ (Tension in Steel)

Chapter Two
Working Stress Method

$f_{ct}' = M(h-y`)/I_{N-A}$ (Tension in Concrete)

$f_{ct}' \leq f_r = 0.62\sqrt{f_c'}$ (Uncracked Section)

$M_{cr} = (f_r * I_{N-A}/(h-y`))*10^6$ kN.m (Cracking Moment)

If $f_{ct}' > f_r$ (Cracked section) That means the section was cracked, e.g., second stage.

Example 2.2:

For the beam shown below, find the maximum magnitude of the concentrated load (P) such that the section stays in the uncracked elastic state, if f_c' = 25 MPa and f_y = 420 MPa (neglect the self-weight of the beam).

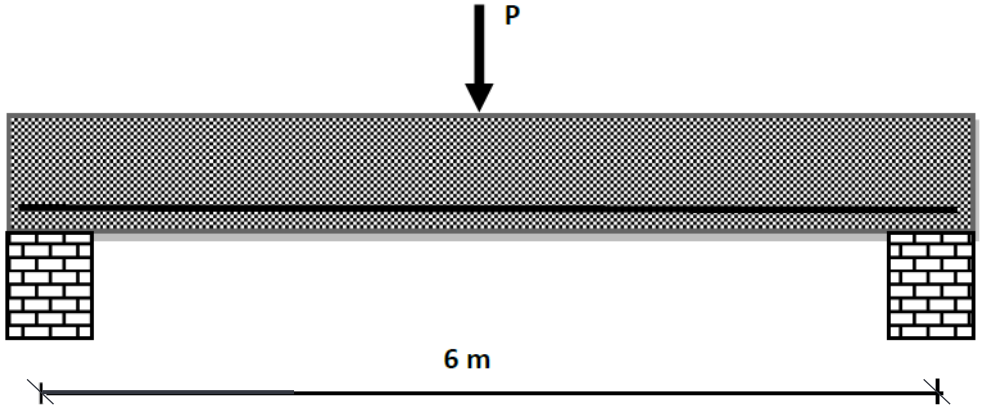

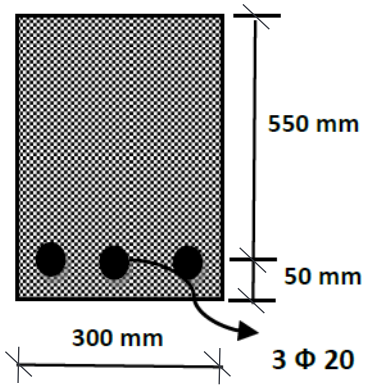

Chapter Two
Working Stress Method

Solution:

As the flexural formula is divided for the homogenous section, then the steel must be transformed for the equivalent concrete to obtain a homogenous section that formed from a single material as:

$n = E_s/E_c = 200000/4700\sqrt{25} = 8.51 = 8.5$

$A_s = 3*(202*\pi/4) = 942.47\ mm^2$

$(n\text{-}1)A_s = (8.5 - 1) * 942.47 = 7068.6\ mm^2$

$y` = \sum Ay/\sum A = (300*600)(600/2)+7068.6*550/(300*600 +7068.6) = 309.45\ mm$

$I_{N\text{-}A} = (300*309.45^3/3)+300(600-309.45)^3/3+7068.6(550-309.45)^2=5.825 *10^9\ mm^4$

Use the flexural formula to compute the cracking moment:

$M_{cr} = f_r*I_{N\text{-}A}/h-y`$

$f_r = 0.62\sqrt{f_c'} = 0.62\sqrt{25} = 3.1\ MPa$

Chapter Two
Working Stress Method

$M_{cr} = (3.1 * 5.825 * 10^{9}/(600-309.45)) * 10^{-6} = 62.15$ kN.m

Compute the max. P that causes crack in bottom zone of concrete as:

$M_{cr} = P_{crack} * L/4$, $P_{crack} = 62.15 * 4/6 = 41.43$ kN

Example 2.3:

For the beam shown below, if f_c' = 24 MPa and f_y = 420 MPa, determine the stresses in concrete and steel for service moment, M = 50 kN.m.

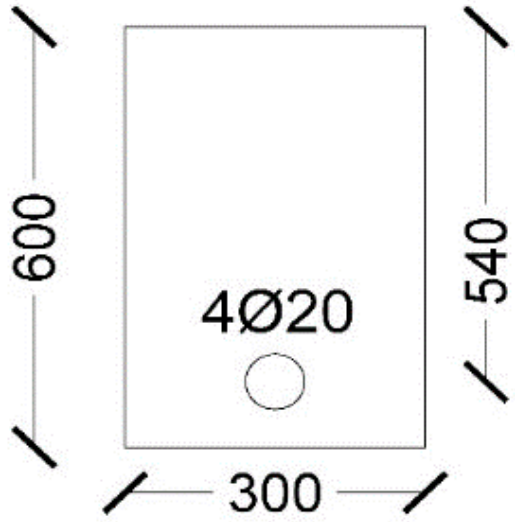

Chapter Two
Working Stress Method

Solution:

For M = 50 kN.m

Check cracked section: E_s= 200000 MPa, E_c = 4700√24 = 23000 MPa

$n = E_s/E_c$ = 200000/23000 = 8.7

If the reinforcement is neglected, $I_g = bh^3/12$ = 300(600)^3/12= 5.4 x 10^9 mm^4

$f_r = 0.62\sqrt{f_c'}$ = 0.62*1*√24 = 3.04 MPa

Tensile stress in concrete, f_t:

$f_t = My_t/I_g$ = (50*10^6)(300)/5.4 x 10^9 = 2.78 MPa < f_r = 3.04 MPa (uncracked section)

So, f_t = 2.78 MPa and from symmetry, f_c = 2.78 MPa

Tensile stress in steel, f_s:

$f_s = n(My_s/I_g)$= 8.7*((50*10^6)(300-60)/5.4 x 10^9) = 19.3 MPa

Chapter Two
Working Stress Method

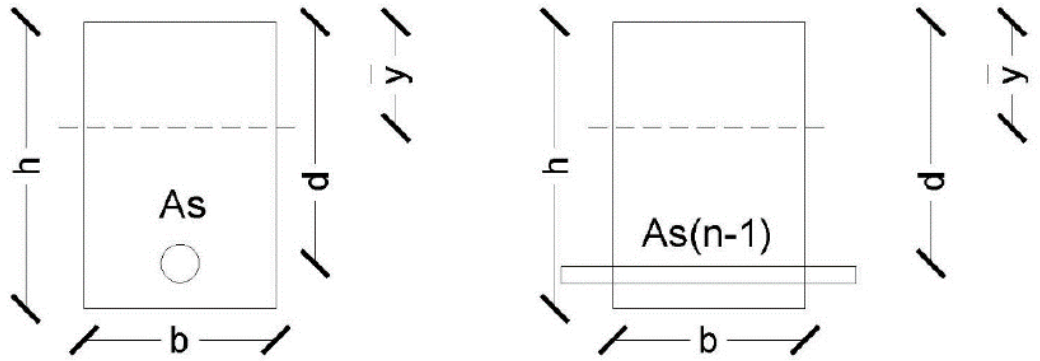

SECTION TRANSFORMED SECTION

If reinforcing steel is considered (take the reference line from the top face of section):

$$y^- = \frac{\sum A_i y_i}{\sum A_i} = \frac{bh\left(\frac{h}{2}\right) + (n-1)(A_s)(d)}{bh + (n-1)(A_s)} = 312mm$$

$$I_g = \frac{bh^3}{12} + bh\left(y^- - \frac{h}{2}\right)^2 + (n-1)(A_s)(d-y^-)^2 = 5.93x10^9 mm^4$$

$$y_c = 312mm, y_t = 600 - 312 = 288mm, y_s = 288 - 60 = 228mm.$$

Chapter Two
Working Stress Method

So,

f_c = 2.63 MPa, Ratio = 2.63/2.78 = 0.95

f_t = 2.43 MPa, Ratio = 2.43/2.78 = 0.87

f_s = 16.72 MPa, Ratio = 16.72/19.3 = 0.87

Example 2.4:

Determine the stress caused by the bending moment of 40 kN.m that applied on a single reinforced concrete beam, use (d = 547.5 mm) with the following details: Compressive strength of concrete, f_c'= 27 MPa and Area of steel (3Φ25) with yield strength of steel, f_y = 420 MPa.

Chapter Two
Working Stress Method

Solution:

Assume the section is elastic and uncracked.

$n = E_s/E_c = 200000/4700\sqrt{27} = 8.19 \approx 8.2$

$A_s = 3*(25^2 x\ \pi/4) = 1472.62\ mm^2$

$(n\text{-}1)A_s = (8.2\ \text{-}1)*1472.62 = 10602.87\ mm2$

$y` = \sum Ay/\sum A = (250*600)(600/2)+(10602.87*547.5)/(250*600+10602.87) = 316.34\ mm$

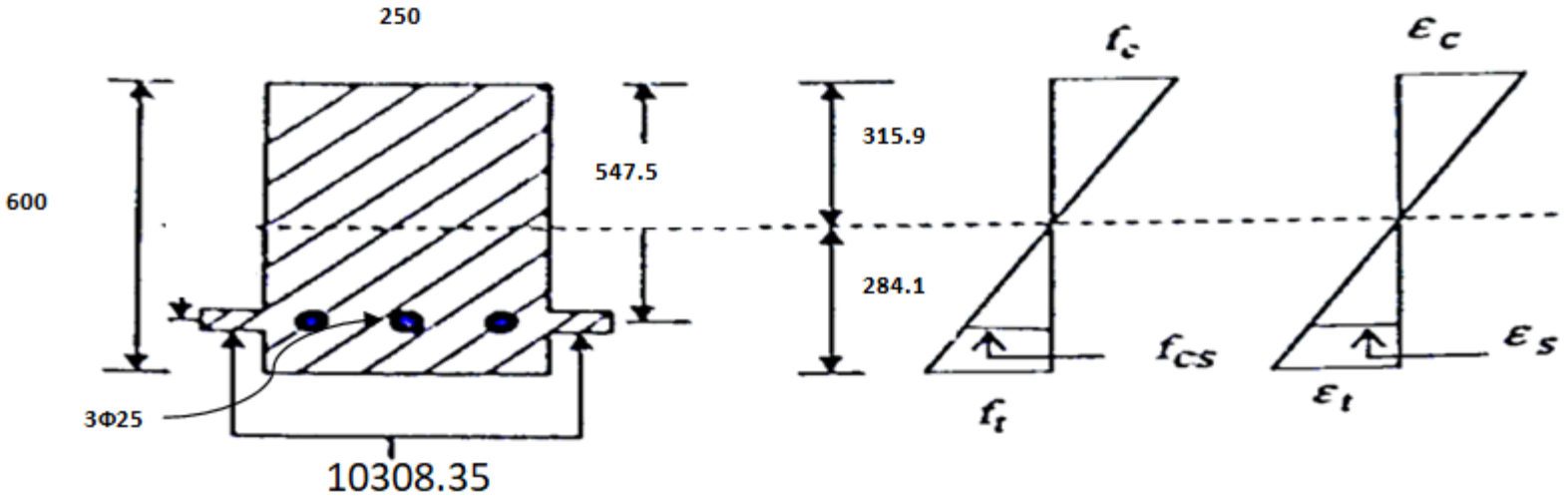

Chapter Two
Working Stress Method

$I_{N\text{-}A} = (250*316.34^3/3) + 250(600-316.34)^3/3 + 10602.87(547.5-316.34)^2 = 5.1066*10^9\ mm^4$

Now find the Stresses:

$f_r = 0.62\sqrt{f_c'} = 0.62\sqrt{27} = 3.22$ MPa

$f_{ct} = 40*10^6*(600-316.34)/5.1066*10^9 = 2.22$ MPa $< f_r = 3.22$ MPa, Okay the section is uncracked

f_c'comp. $= My'/I_{N\text{-}A} < 0.45\, f_c'$ (Compression)

f_c'comp. $= 40*10^6*316.34/5.1066*10^9 = 2.477$ MPa $< 0.45*27 = 12.15$ MPa Okay

$f_s = (M(d-y')/I_{N\text{-}A}) * n < f_{s,all}$ (Tension)

$f_s = (40*10^{6*}(547.5-316.34)/5.1066*10^9)* 8.2 = 18.85$ MPa < 170 MPa Okay

Section is elastic and uncracked as assumed

Chapter Two
Working Stress Method

Example 2.5:

For a rectangular beam (350x700) mm with, f_c' = 25 MPa and f_y = 420 MPa as shown below find:

1- Stresses in concrete and steel if the concentrated applied load is P = 10 kN.

2- The value of the cracking load (the load that causes the first crack to appear).

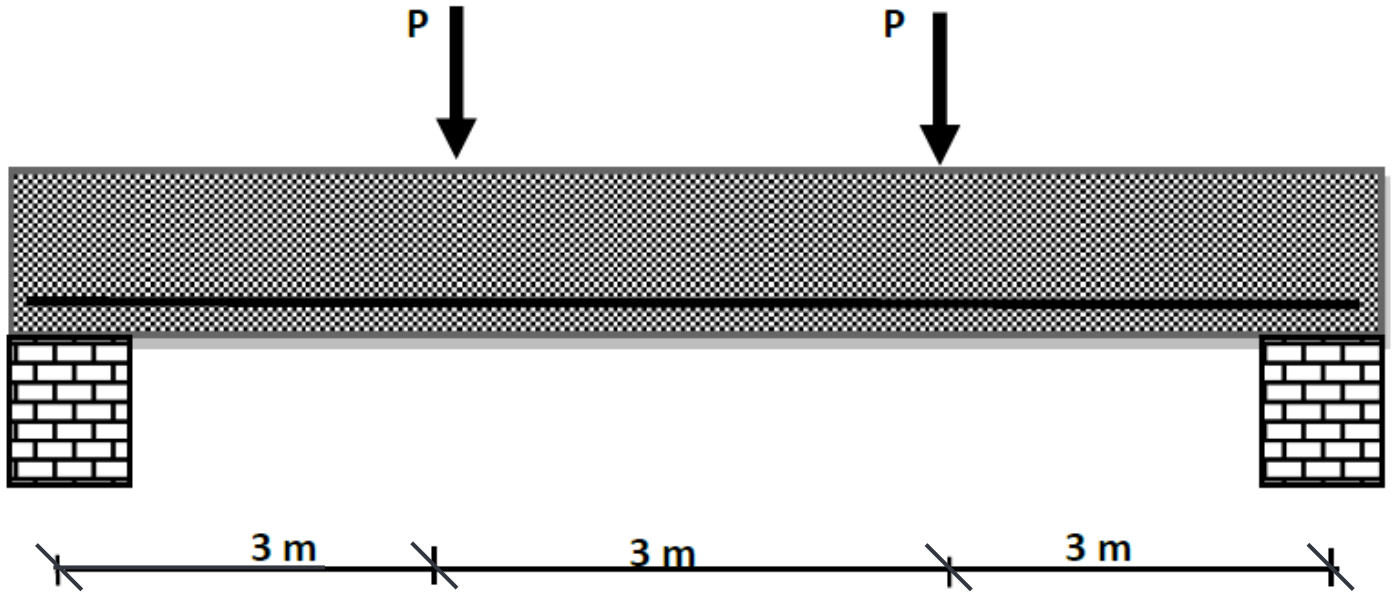

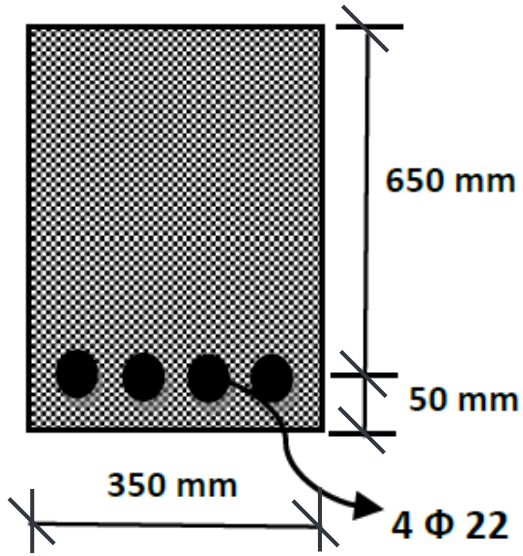

Chapter Two
Working Stress Method

Solution:

Self-weight of beam = $\gamma_c A_c = 24*(0.35*0.7) = 5.88$ kN/m

$M_{max.} = wl^2/8 + Pa = (5.88*9^2/8) + 10*3 = 89.535$ kN.m

Assume the section is elastic and uncracked

$n = E_s/E_c = 200000/4700\sqrt{25} = 8.5$

$A_s = 4*(22^2 x\ \pi/4) = 1520.53$ mm^2

$(n\text{-}1)A_s = (8.5 - 1)*1520.53 = 11404$ mm2

$y` = \sum Ay/\sum A = (350*700)(700/2)+(11404*650)/(350*700+11404) = 363.34$ mm

$I_{N\text{-}A} = (350*363.34^3/3)+350(700-363.34)^3/3+11404(650-363.34)^2$

$= 10.9848*10^9$ mm^4

1- Find the stresses:

$f_r = 0.62\sqrt{f_c'} = 0.62\sqrt{25} = 3.1$ MPa

Chapter Two
Working Stress Method

f_{ct} = 89.535*10^6*(700−363.34)/10.9848*10^9 = 2.74 MPa < f_r = 3.1 MPa, Okay the section is uncracked

f_c'comp. = $My'/I_{N\text{-}A}$ < 0.45 f_c' (Compression)

f_c'comp. = 89.535∗10^6∗363.34/10.9848∗10^9 = 2.96 MPa < 0.45*25 = 11.25 MPa Okay

$f_s = (M(d-y')/I_{N\text{-}A}) * n < f_{s,all}$ (Tension)

f_s = (89.535∗10^{6*}(650−363.34)/10.9848∗10^9)* 8.5 = 19.86 MPa < 170 MPa Okay

Section is elastic and uncracked as assumed

2- $\boldsymbol{M_{cr}} = f_r * I * 10^{-6}/(h-y')$

= (3.1∗ 10.9848 ∗10^9/(700−363.34))*10^{-6} = 101.15 kN.m

$M_{cr} = M_{max.} = wl^2/8 + P_{cr}*a = (5.88*9^2/8) + P_{cr}*3 = 101.15$

P_{cr} = 13.872 kN

Chapter Two
Working Stress Method

H.W.1: A rectangular beam with dimension of (250*635) mm and d = 584 mm, f_c' = 28 MPa and f_y = 400 MPa. Check the state of the section and determine the stress caused by the bending moment, M = 61 kN.m.

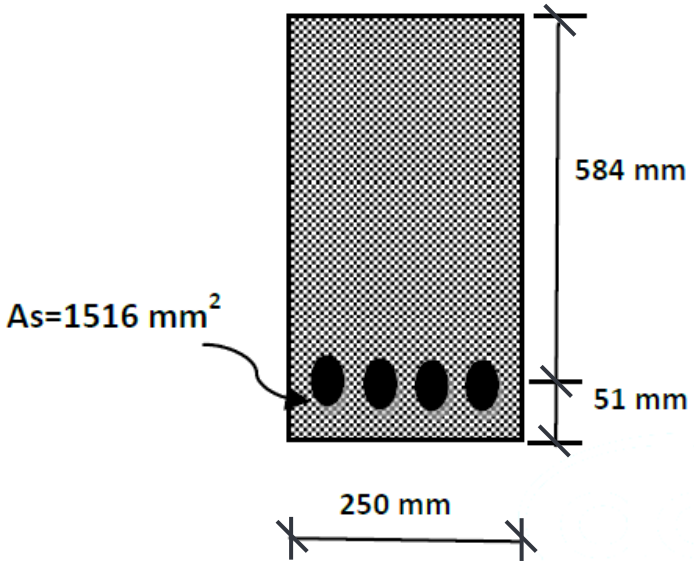

Chapter Two
Working Stress Method

2- Cracked Section:

- When the load is further increased the tension cracks develop and propagate quickly upward to or closed to level of the neutral plane, which in turn shifts upward with progressive cracking.

- In well-designed beams the width of these cracks is so small (hairline cracks) which they are not harmful from the viewpoint of the either corrosion protection or appearance.

- In cracked section, the concrete does not transmit any tension stresses. Hence, the steel is called upon to resist the entire tension. If the concrete stress do not exceed approximately $f_c'/2$ and the steel stress has not reached the yield point, stresses and strains continue to be closely proportional. Then, the distribution of strain and stress are shown below.

Chapter Two
Working Stress Method

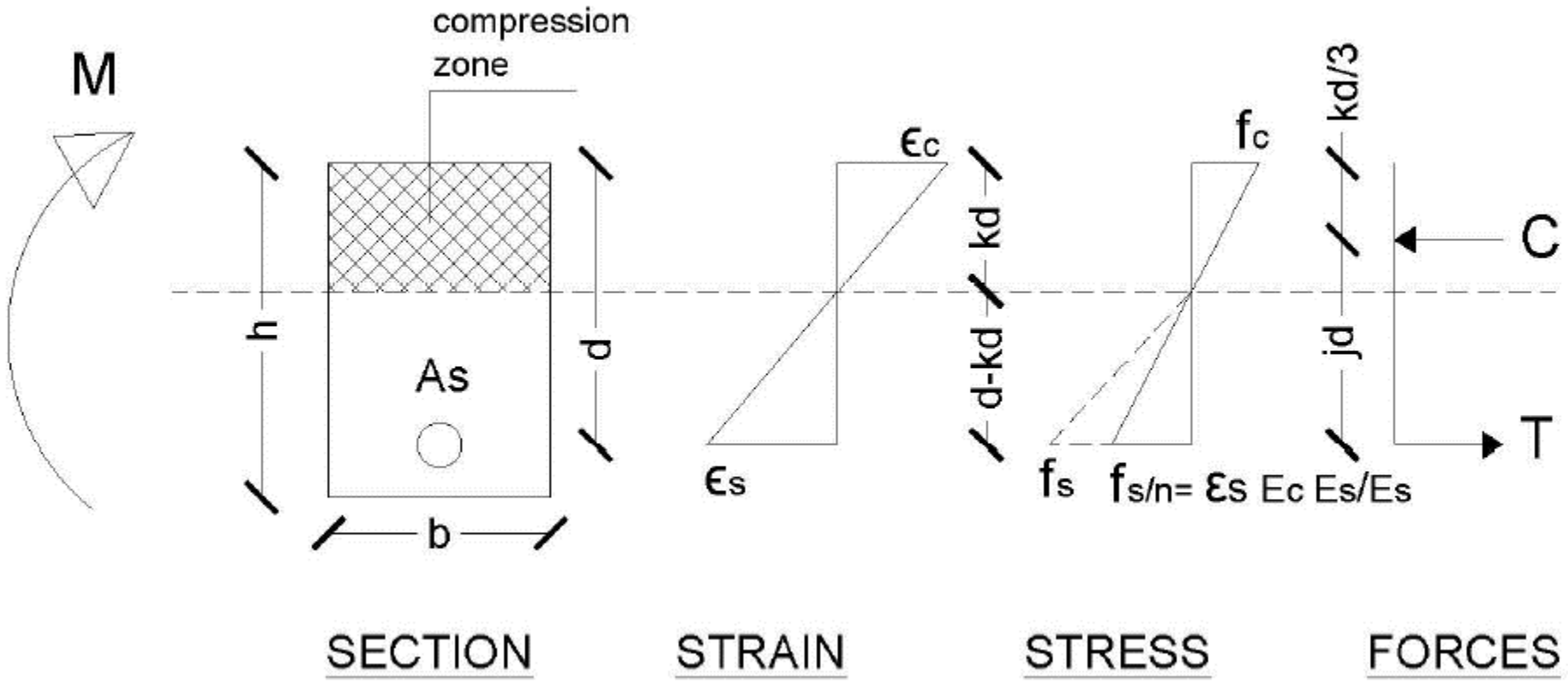

Cracked section

Chapter Two
Working Stress Method

$f_{ct} \geq f_r$

$f_c < 0.45 f_c'$ Concrete elastic

$f_s < f_s\, all$ Steel elastic

- This situation (Elastic Cracked Section) generally occurs in structures under normal service loads (Unfactored loads).
- The stresses and strains in the elastic cracked section can be computed based on transforming the steel to an equivalent concrete, and then use the conventional flexure formula:

$$\delta = Mc/I$$

We will assume that the crack goes all the way to the *N.A.* and will use the transformed section. Neutral axis or line of zero strain is located by considering the equilibrium of forces acting on cross section as follows:

Moment of compression area about *N.A.* (*C*) = Moment of tension area about *N.A.* (*T*)

Chapter Two
Working Stress Method

$$C = T$$

$$bkd\frac{f_c}{2} = A_s f_s$$

To determine the unknown stresses f_c and f_s, utilize the relationship between the stresses from similar triangles in the stress diagram,

$$\frac{f_c}{kd} = \frac{f_s/n}{d - kd}$$

Let,

$$\rho = \frac{A_s}{bd}$$

From the three equations, above:

$$k = -n\rho + \sqrt{(n\rho)^2 + 2n\rho}$$

Chapter Two
Working Stress Method

For a given bending moment, *M*, the maximum concrete and steel stresses are:

$$f_c = \frac{Mkd}{I_{cr}}$$

$$f_s = \frac{M(d-kd)}{I_{cr}} n$$

The moment of inertia, I_{cr} is given by: (neglecting concrete in tension zone)

$$I_{cr} = \frac{b(kd)^3}{3} + nA_s(d-kd)^2$$

To determine the maximum allowable moment capacity in tension and compression used the maximum permissible stresses in compression and tension

$M_{max} = 0.45 f_c' * I_{cr}/kd$ (Compression)
$M_{max} = f_s * I_{cr}/(d-kd)$ (Tension) Use a smaller value of them!

Chapter Two
Working Stress Method

f_c and f_s can be determined using another procedure as follows:

$$M = Cjd = Tjd$$

$$jd = d - \frac{kd}{3} \qquad j = 1 - \frac{k}{3}$$

$$M = Cjd = bkd\left(\frac{f_c}{2}\right)jd \qquad \rightarrow \quad f_c = \frac{2M}{bd^2kj}$$

And

$$M = Tjd = A_s f_s jd \qquad \rightarrow \quad f_s = \frac{M}{A_s jd}$$

Chapter Two
Working Stress Method

Example 2.6:

A rectangular beam with dimension of (300 x 500) mm and d = 420 mm. f_c' = 21 MPa and f_y = 420 MPa. Determine the stresses in concrete and steel if:

- The applied bending moment is (M = 35 kN.m)
- The applied bending moment is (M = 80 kN.m)

Solution:

1- The applied bending moment (M =35 kN.m)

Assume the section is elastic and uncracked

$n = E_s/E_c = 200000/4700\sqrt{21} = 9.3$

$(n\text{-}1)As = (9.3 - 1)*1847 = 15330.1\ mm^2$ $\quad A_s = 1847\ mm^2$

$y` = \sum Ay/\sum A$

$= (300*500)(500/2)+(15330.1*420)/(300*500+15330.1)$

$= 265.76$ mm

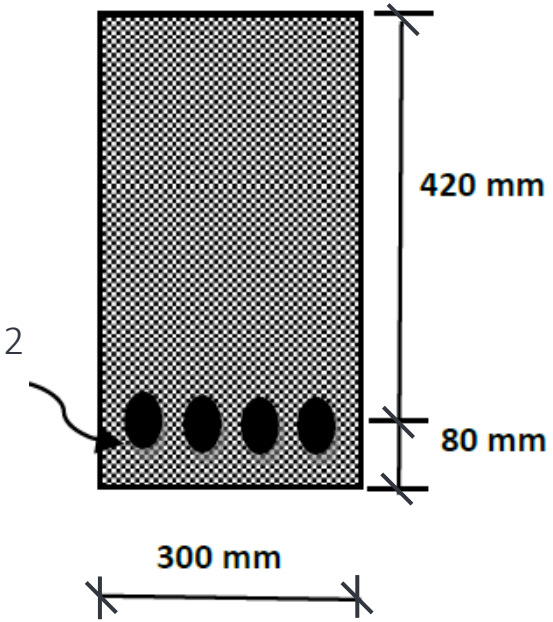

Chapter Two
Working Stress Method

$I_{N\text{-}A} = (300*265.76^3/3)+300(500-265.76)^3/3+15330.1(420-265.76)^2$
$= 3.5269*10^9$ mm4

Find the stresses:

$f_r = 0.62\sqrt{f_c'} = 0.62\sqrt{21} = 2.841$ MPa

$f_r = M_{cr}(h\text{-}y')/I_{N\text{-}A}$

$M_{cr} = (2.841*3.5269*10^9/(500\text{-}265.76))*10^{-6} = 42.77$ MPa > M = 35 MPa Okay the section is uncracked

$f_{ct} = (M(h-y')/I_{N\text{-}A}) < f_r$ (Tension)

$f_{ct} = (35*10^6(500-265.76)/3.5269*10^9) = 2.32$ MPa < $f_r = 2.841$ MPa Okay section is elastic and uncracked as assumed

f_c'comp. $= My'/I_{N\text{-}A} < 0.45\, f_c'$ (Compression)

f_c'comp. $= 35*10^6*265.76/3.5269*10^9 = 2.64$ MPa < $0.45*21 = 9.45$ MPa Okay

Chapter Two
Working Stress Method

$f_s = (M(d-y')/I_{N\text{-}A}) * n < f_{s,all}$ (Tension)

$f_s = (35*10^{6*}(420-265.76)/3.5269*10^9)* 9.3 = 14.23$ MPa < 170 MPa Okay

Section is elastic and uncracked as assumed

2- The applied bending moment (M = 80 kN.m)

$M_{appiled} > M_{cracking}$

80 > 42.77 The section is cracked

$k = \sqrt{(n\rho)^2+2n\rho} - n\rho$

$\rho = A_s/bd = 1847/300*420 = 0.01466$

$n\rho = 9.3*0.01466 = 0.1363$

$k = 0.4033$

$I_{N.A} = bkd^3/3 + nA_s(d-kd)^2 = 1.5648*10^9$ mm^4

Chapter Two
Working Stress Method

$f_c = 80*10^6*(0.4033*420)/1.5648*10^9 = 8.656$ MPa $< 0.45f_c' = 9.45$ MPa

$f_s = (M(d-kd)/I_{N\text{-}A}) * n < f_{s,all}$ (Tension)

$f_s = (80*10^6(420-0.4033*420)/1.5648*10^9)* 9.3 = 119.16$ MPa < 170 MPa Okay

Or by using internal couple method

$$fs = \frac{M}{Asjd} < fs \quad \text{(Tension)}$$

$$J = 1 - k/3 = 1 - 0.4033/3 = 0.865$$

$$fs = \frac{80*10^6}{1847*0.865*420} = 119.15 \text{ MPa} < 170 \text{ ok}$$

$$f`c = \frac{2M}{kj\ b\ d^2} < 0.45\ f`c \quad \text{(Compression)}$$

$$f`c = \frac{2*95*10^6}{0.4033*0.866*300*420^2} < 9.45$$

$$f`c = 8.656 < 9.45 \text{ ok}$$

Chapter Two
Working Stress Method

H.W.2: Find the maximum applied load (*P*) that can be applied on the rectangular beam with dimension of (300x 600) mm ,f_c' = 21 MPa and f_y = 420 MPa (neglect the self-weight of the beam).

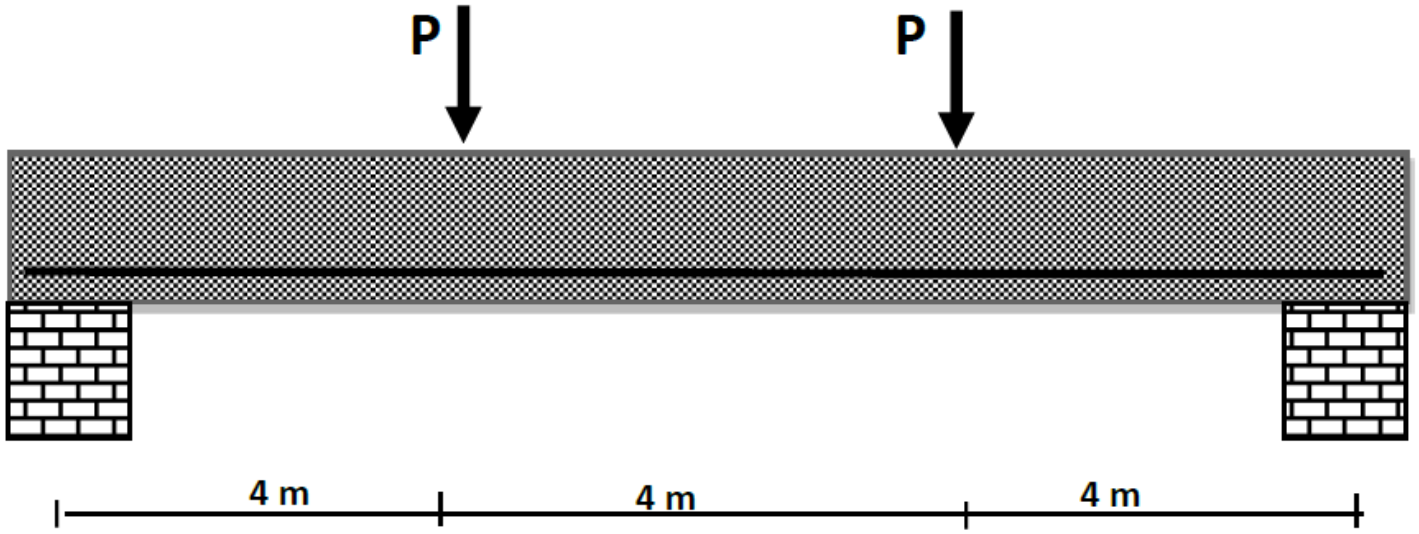

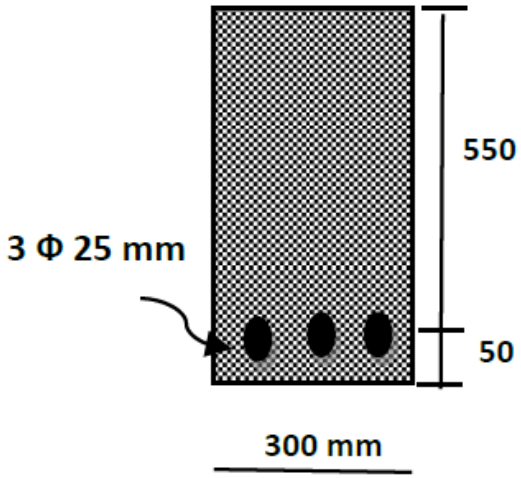

Chapter Two
Working Stress Method

H.W.3: For the above **H.W.2** determine the stresses if the applied load is (25 kN) with including self-weight.

H.W.4: Find the maximum allowable load (*P*) that the beam can be carry without exceeding the elastic limit where, f_c' = 21 MPa and f_y = 420 MPa.

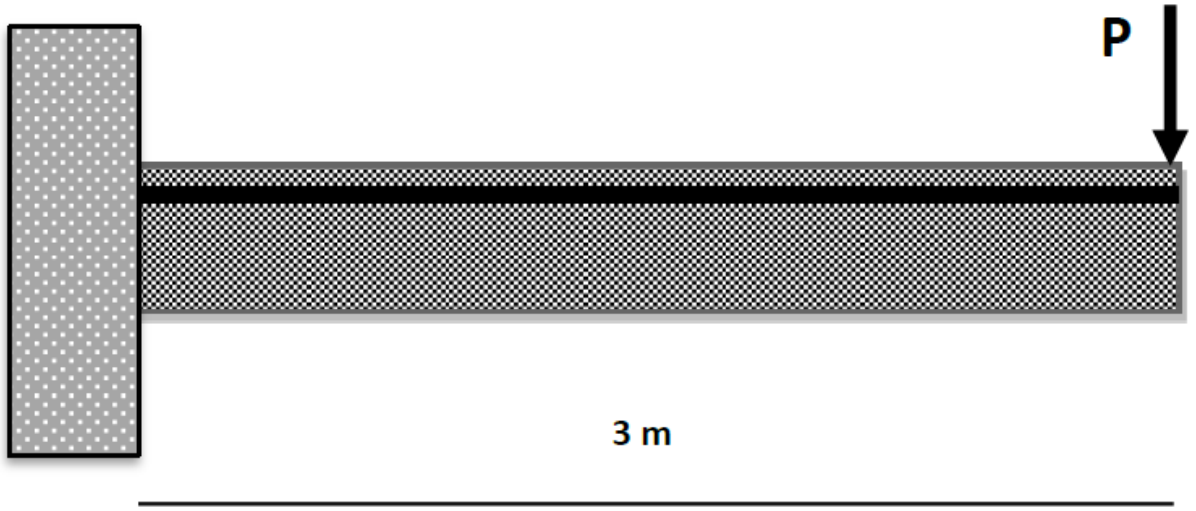

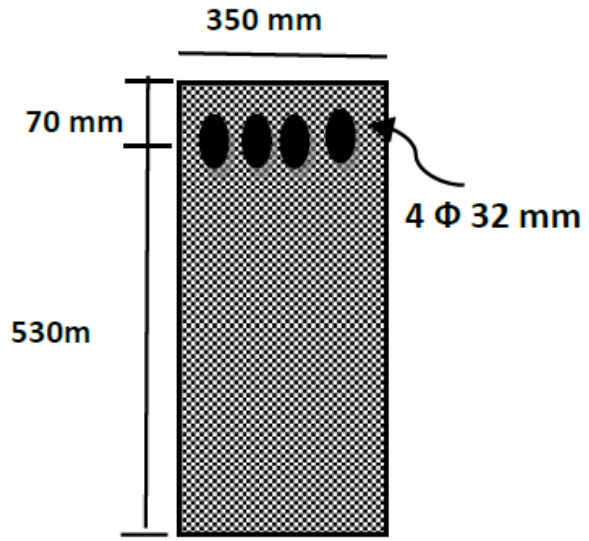

Chapter Two
Working Stress Method

H.W.5: For the simply supported beam shown below reinforced by 4Φ25 bars (f_y = 420 MPa), the concrete strength (f_c' = 21 MPa) evaluate the following:

1- Check the actual flexural stresses in concrete and steel if the span length equal to (4 m), dead load 8 kN/m including self-weight of the beam, live load equal to 10 kN/m.

2- The length of beam span that makes the concrete in tension face starts to crack.

3- The actual stress in concrete and steel if the span length of the beam is equal to 7 m.

